NRM-604L-27WK-D

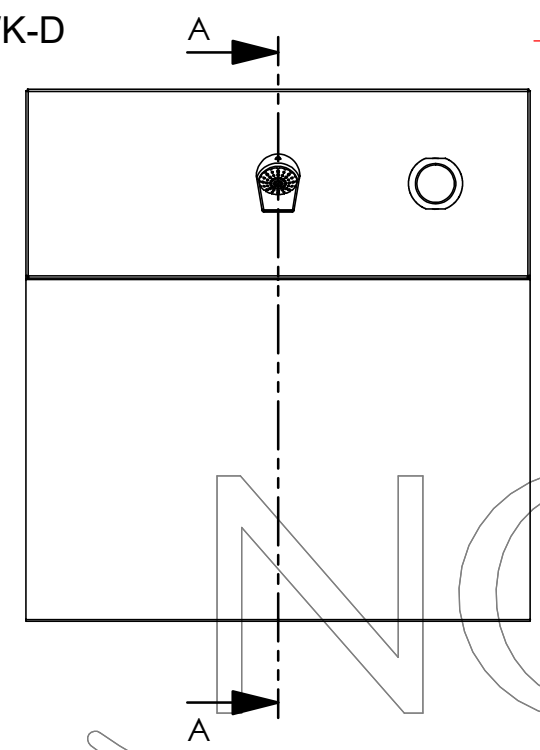

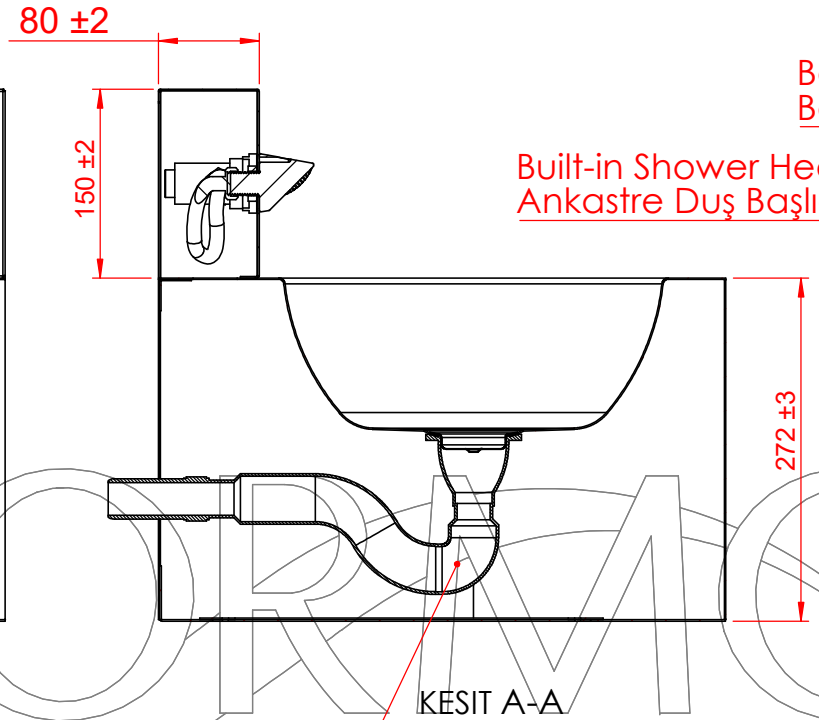

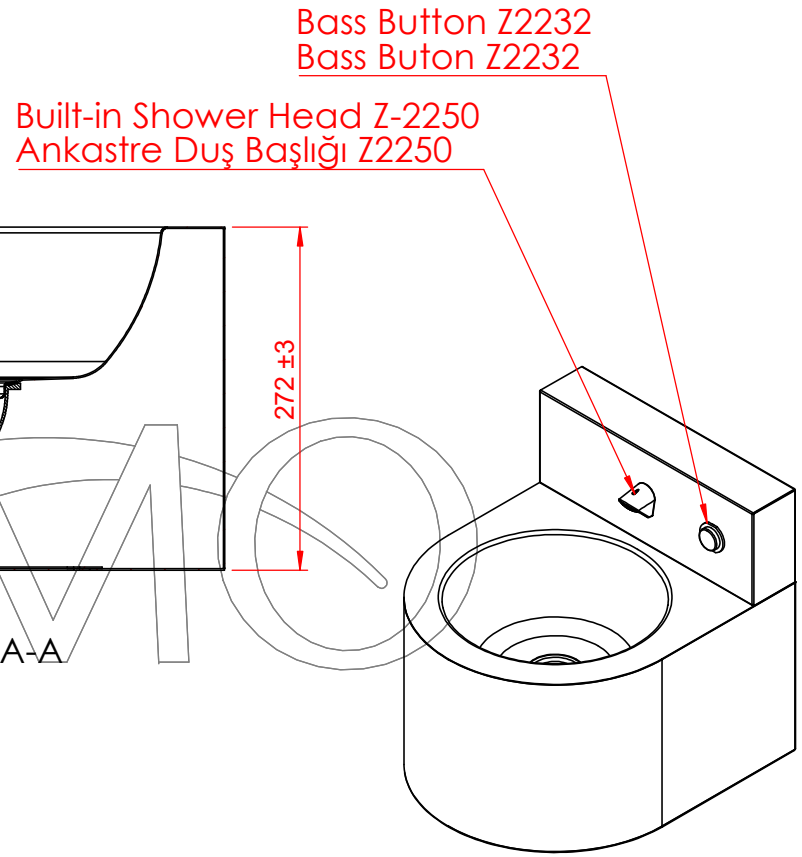

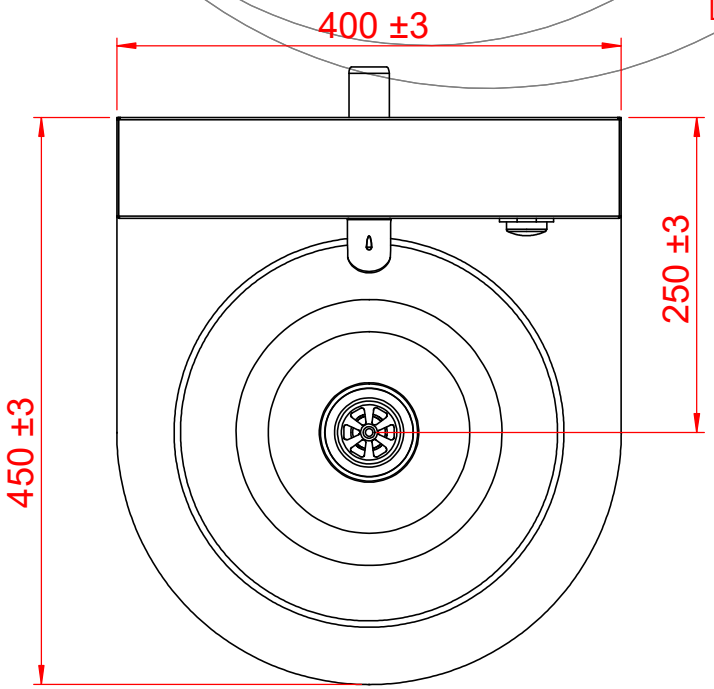

NORMO

Optional / Opsiyonel

Built-in Shower Head Z-2250/Ankastre Duş Başlığı Z2250
Bass Button Z2232 /Bass Buton Z2232
DN32 Siphon /DN32 Sifon

Connection / Bağlantı

Screw 4 Pieces / Vida 4 Adet
Dowel 4 Pieces / Dubel 4 Adet